ONLINE CERTIFICATIONS DIRECTORY

Construction No. 268C
TGKX.268C
Roof Deck Constructions

Page Bottom

Design/System/Construction/Assembly Usage Disclaimer

- Authorities Having Jurisdiction should be consulted in all cases as to the particular requirements covering the installation and use of UL Certified products, equipment, system, devices, and materials.
- Authorities Having Jurisdiction should be consulted before construction.
- Fire resistance assemblies and products are developed by the design submitter and have been investigated by UL for compliance with applicable requirements. The published information cannot always address every construction nuance encountered in the field.
- When field issues arise, it is recommended the first contact for assistance be the technical service staff provided by the product manufacturer noted for the design. Users of fire resistance assemblies are advised to consult the general Guide Information for each product category and each group of assemblies. The Guide Information includes specifics concerning alternate materials and alternate methods of construction.
- Only products which bear UL's Mark are considered Certified.

Roof Deck Constructions

See General Information for Roof Deck Constructions

Construction No. 268C

October 07, 2015

Wind Uplift — Class 90

Fire Not Investigated

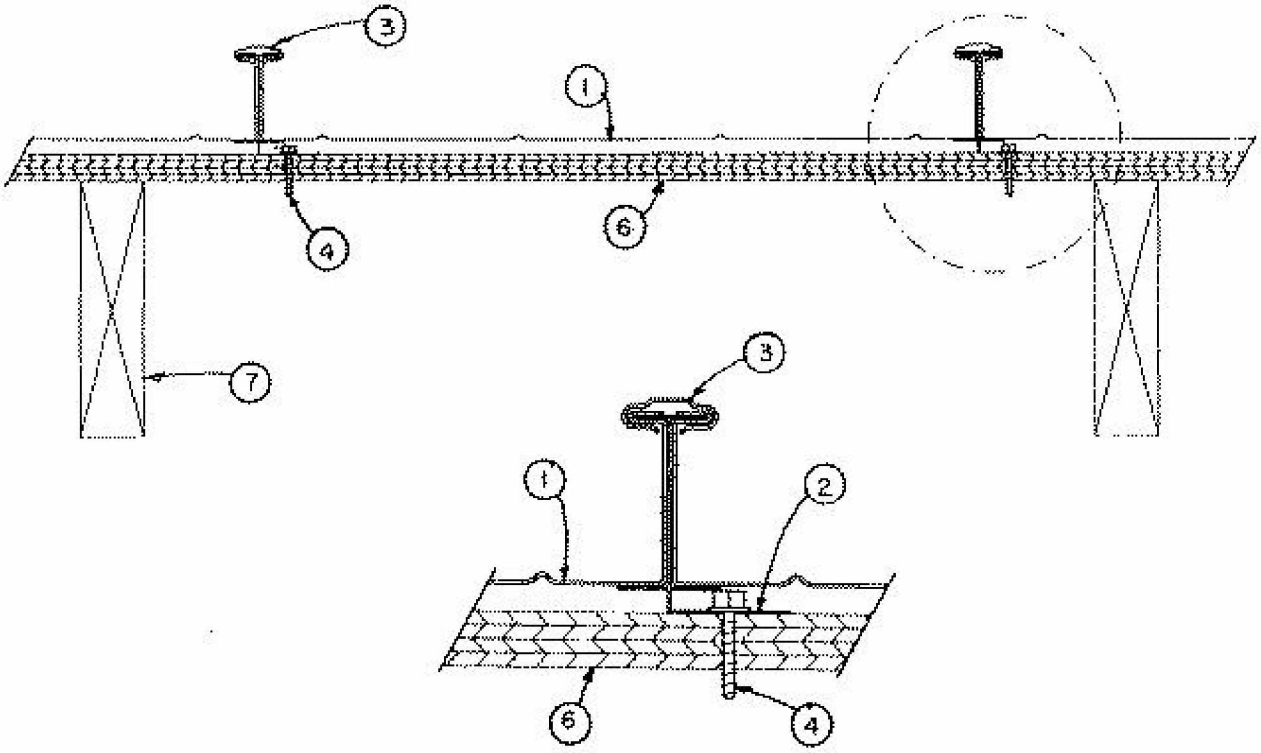

1. **Metal Roof Deck Panels* —** Min No. 24 MSG gauge steel or stainless steel, nom 16 in. wide, 1-3/8 in. high standing seams. Heavier gauges or narrower panels acceptable. Panels continuous over three or more clips with no end laps.

MCELROY METAL MILL INC (View Classification) — "138T Roof Panel"

2. **Panel Clips* —** No. 16 MSG min gauge coated steel or stainless steel, 3.5 in. long by 1.5 in. high. Base to have two or four 0.281 in. dia. guide holes to accommodate screw fasteners (Item 4). Clips spaced 36 in. OC max, fastened to plywood deck.

MCELROY METAL MILL INC (View Classification) — "138T Roof Clip", "4 in. ASV Clip" or "8 in. Shingle Recover Clip with ASV"

3. **Cap —** Used at seam, nom 1 in. wide, 1/2 in. deep fabricated from min No. 24 MSG steel, stainless steel. Cap continuously seamed over panel seams with a special motorized seaming tool. Seaming process to include panel clips (Item 2) and a bead of caulk.

4. **Fasteners — (Screws) —** Fasteners used to attach panel clips to plywood deck to be No. 10-12 by 1 in., carbon or stainless steel screws. When the 5B. Underlayment is used, fasteners used to attach panel clips to plywood deck to be No. 14-10 Type A x 1-1/2 in. carbon or stainless steel screws. Two fasteners per clip to be used with the "138T Roof Clip" or "4 in. ASV Clip". Four fasteners per clip to be used with the "8 in. Shingle Recover Clip with ASV".

5. **Underlayment —** (Optional) — (Not Shown) Underlayment used over plywood deck to be Type 15 or 30 organic felt. Sides overlapped min 2 in., end laps per manufacturer's instructions. Felt nailed to plywood deck with 1-1/4 in. long steel cap nails, located per manufacturer's instructions. Nail spacing to be max 12 in. OC at the side lap and max 24 in. OC in interior rows.

5A. **Underlayment —** (Optional) — (Not Shown) A self-adhering modified bitumen water proofing membrane may be used, installed per manufacturer's instructions.

5B. **Underlayment —** (Optional) — (Not Shown) A layer of existing 3 tab or laminate (asphalt or organic) shingles and existing shingle underlayment may be retained in-place under the metal roofing. An additional layer of Type 15 or 30 organic felt or *self-adhering modified bitumen membrane may be used on top of the shingles per manufacturer's instructions.

6. **Plywood Decking —** Plywood decking to be graded per PS83 specifications, 19/32 in. thick, exposure 1, APA Rated Sheathing (42/20) square edged. Butt ends not blocked.

7. **Supports —** Spaced max of 24 in. OC. Any of the following types may be used to support the plywood decking:

a) Nom 2 by 6 in., No. 2 grade or better S-P-F, Hemlock Fir, Douglas Fir or Southern Yellow Pine or equivalent.

b) Wood trusses with a nom 2 by 4 in. upper chord of the same grade as item a.

c) No. 22 MSG min cold formed coated steel (min yield to be 3,000 psi).

8. **Plywood Fasteners —** (Not Shown) Fasteners used to attach the plywood deck to the supports to be as follows:

a) For plywood-to-wood supports No. 8-18 by 1-7/8 in. long bugle-head steel screws with a No. 2 Phillips drive, a "Hi-Low" thread pattern and an "S-Point".

b) As an alternate to Item a, 8d common nails may be used.

c) For plywood-to-steel supports for a steel thickness less than No. 20 MSG No. 7-19 by 1-1/4 in. long bugle-head steel screws with a No. 2 Phillips drive, a "Hi-Low" thread pattern and an "S-Point". For a steel thickness greater than No. 20 MSG to No. 16 MSG, No. 6-20 by 1-1/4 in. long bugle-head steel screws with a No. 2 Phillips drive and a S12 (TEKS/3) supR point.

Spacing: Fastener spacing for all fastener types to be 6 in. OC at the plywood edges and 12 in. OC in the interior.

Refer to General Information, Roof Deck Construction (Roofing Materials and Systems Directory) for items not evaluated.

*** Indicates such products shall bear the UL or cUL Certification Mark for jurisdictions employing the UL or cUL Certification (such as Canada), respectively.**

Last Updated on 2015-10-07

Questions? Print this page Terms of Use Page Top

© 2015 UL LLC

The appearance of a company's name or product in this database does not in itself assure that products so identified have been manufactured under UL's Follow-Up Service. Only those products bearing the UL Mark should be considered to be Certified and covered under UL's Follow-Up Service. Always look for the Mark on the product.

UL permits the reproduction of the material contained in the Online Certification Directory subject to the following conditions: 1. The Guide Information, Assemblies, Constructions, Designs, Systems, and/or Certifications (files) must be presented in their entirety and in a non-misleading manner, without any manipulation of the data (or drawings). 2. The statement "Reprinted from the Online Certifications Directory with permission from UL" must appear adjacent to the extracted material. In addition, the reprinted material must include a copyright notice in the following format: "© 2015 UL LLC".